EV Radial Bladed Blowers

BPR 2 Pole Series (BPR352A-BPR401B)

Performance curves - inlet / discharge side
Curve illustrated is for 2 pole (2900 RPM)

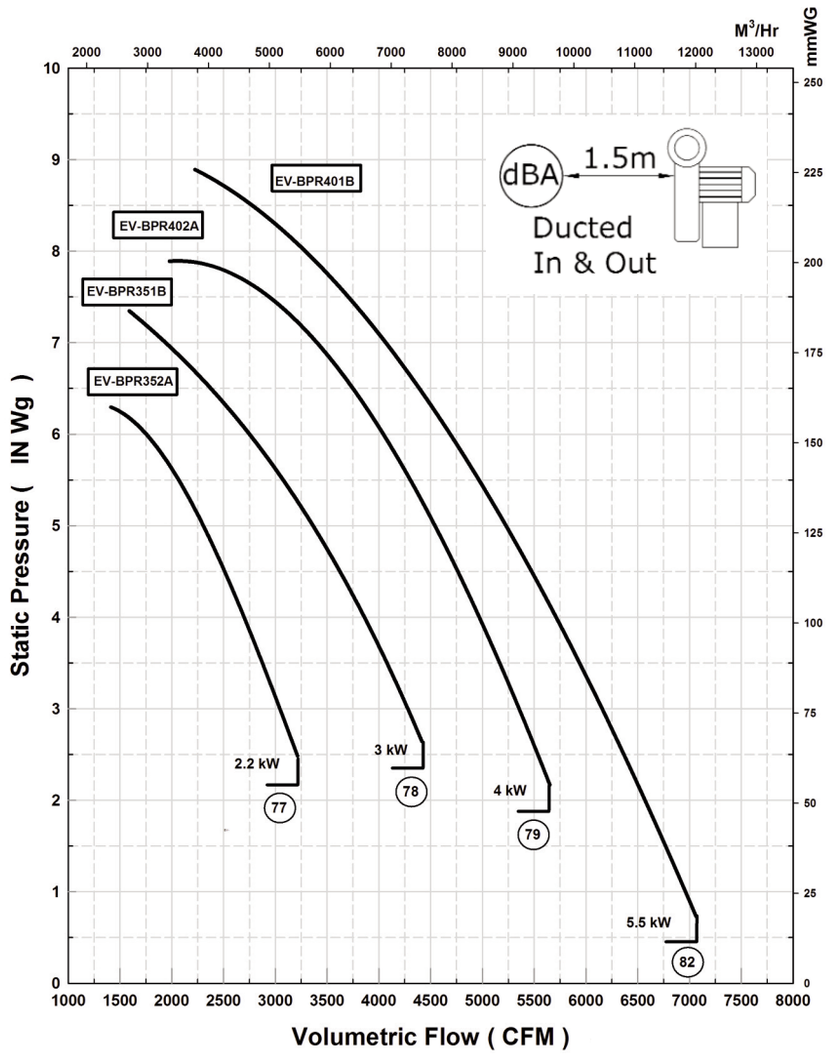

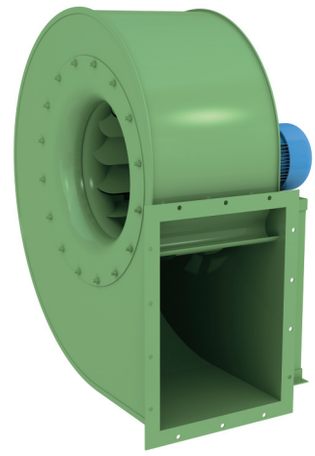

Low-pressure centrifugal fan / High efficiency and low-noise reverse blade impeller / Directly coupled motor.

Optional Extras Include:

- Control Valves
- Inlet & Outlet Flexible Connectors
- Anti-vibration mountings

Please note:

Pascal = (In.SWG x 249)
M³/Hr = (CFM x 1.699)

Noise level tolerances +3dB(A)

Description:
Low-pressure centrifugal fan. High efficiency and low-noise reverse blade impeller. Directly coupled motor.

Use:
This series of blowers are particularly suitable for aspiration of clean and slightly dusty air.

Please note:
- Maximum air temperature through fan is 80°C without cooling fan, and 150°C with cooling fan. Please consult ACI's Technical Sales Department.

EV Radial Bladed Blowers

BPR 2 Pole Series (BPR352A-BPR401B)

Outline drawing dimensions:

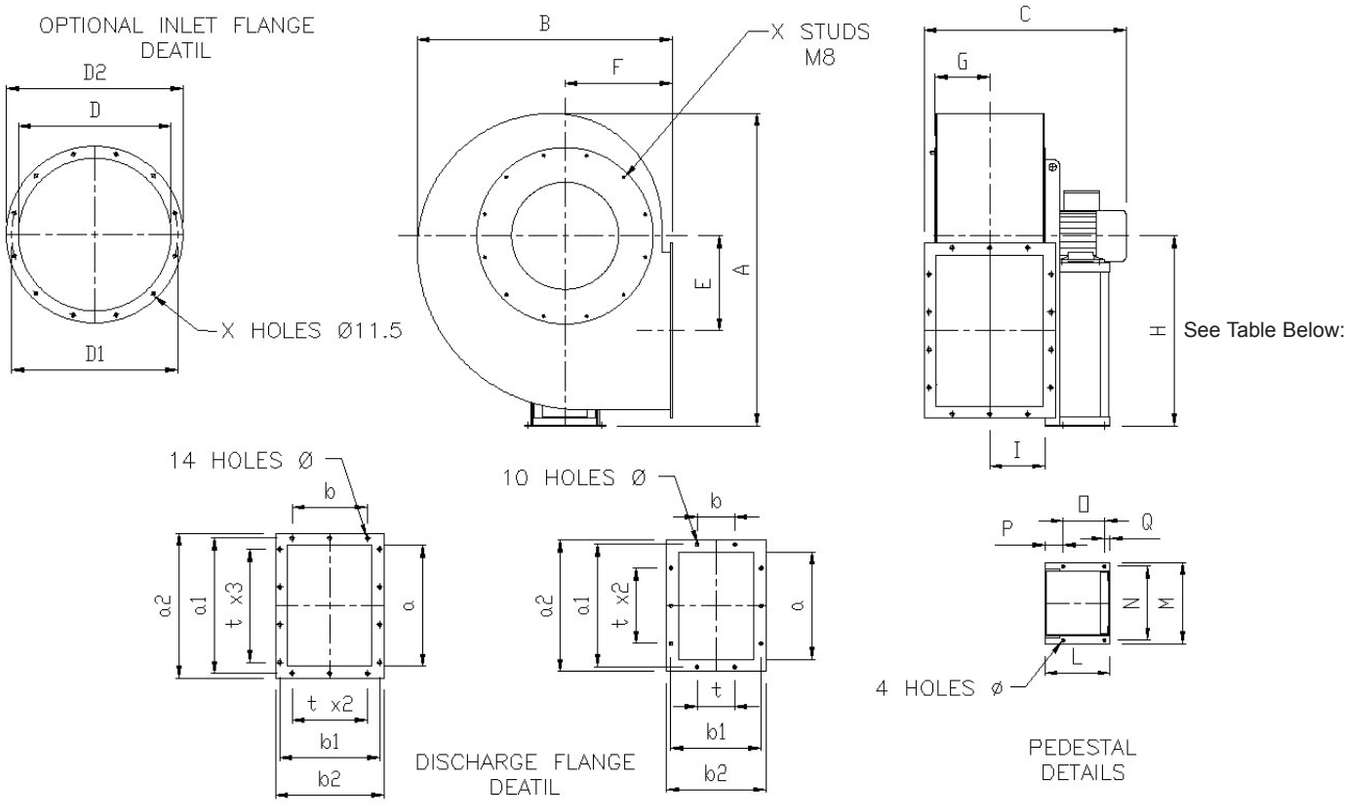

BPR Range painted RAL6011 Green as standard. [Other colours available upon request.]

All BPR Fans are revolvable.

* If AV mountings are required, a front pedestal/foot is necessary for support (details on request)

Viewed from motor side
Table of discharge angles (* Options may incur additional cost)

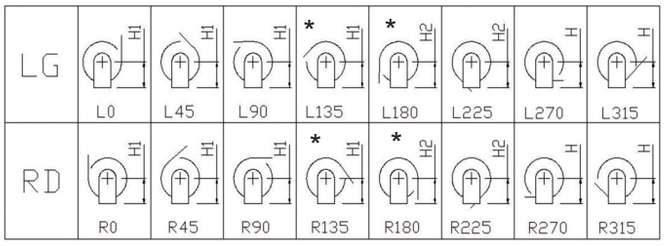

Table for blower dimensions:

Type		Fan										Base													Inlet Flange				Discharge Flange									Weight
Fan	Motor	A	B	C	E	F	G	H	H1	H2	I	L	M	N	N1	O	P	Q	R	S	T	U	V	Ø	D	D1	D2	N0	a	b	a1	b1	a2	b2	t	N0	Ø	Kg
BPR 352/A	90 L2	740	620	575	225	265	130	450	450	265	132	215	270	245	-	137	60	18	-	-	-	-	-	10	361	405	441	8	355	250	405	300	435	330	125	10	11,5	60
BPR 351/B	100 LA2			640								260	332	300		200	35	25						12														70
BPR 402/A	112 M2	830	695	670	250	300	146	500	500	300	148	260	332	300	-	200	35	25	-	-	-	-	-	12	405	448	485	8	400	280	448	332	480	360	125	14	11,5	90
BPR 401/B	`132 SA2			730								320	392	360		250	45	25						12														100

Please note (1) - all drawings measurements are in millimeters (mm)
Please note (2) - above technical specifications are subject to change

AIR CONTROL INDUSTRIES LTD
Weycroft Avenue, Millwey Industrial Estate,
Axminster, Devon, EX13 5HU
t: +44(0)1297 529242 **f:** +44(0)1297 529241
e: sales@aircontrolindustries.com
w: www.aircontrolindustries.com

Ref: EV BPR 2014/V1

EV Radial Bladed Blowers

BPR 2 Pole Series (BPR452A-BPR501B)

Performance curves - inlet / discharge side
Curve illustrated is for 2 pole (2900 RPM)

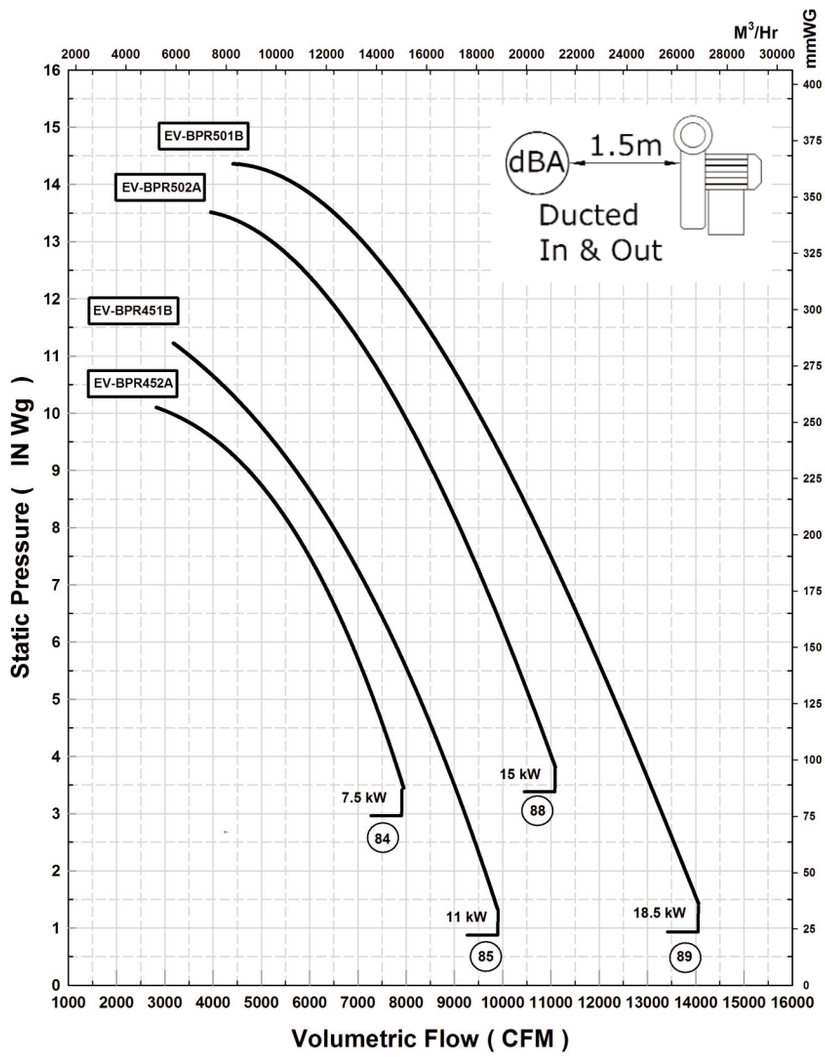

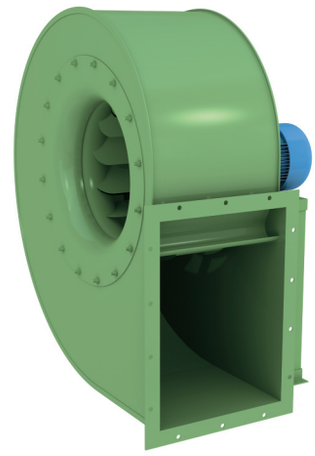

Low-pressure centrifugal fan / High efficiency and low-noise reverse blade impeller / Directly coupled motor.

Optional Extras Include:

- Control Valves
- Inlet & Outlet Flexible Connectors
- Anti-vibration mountings

Please note:

Pascal = (In.SWG x 249)
M³/Hr = (CFM x 1.699)

Noise level tolerances +3dB(A)

Description:
Low-pressure centrifugal fan. High efficiency and low-noise reverse blade impeller. Directly coupled motor.

Use:
This series of blowers are particularly suitable for aspiration of clean and slightly dusty air.

Please note:
- Maximum air temperature through fan is 80°C without cooling fan, and 150°C with cooling fan. Please consult ACI's Technical Sales Department.

EV Radial Bladed Blowers

BPR 2 Pole Series (BPR452A-BPR501B)

Outline drawing dimensions:

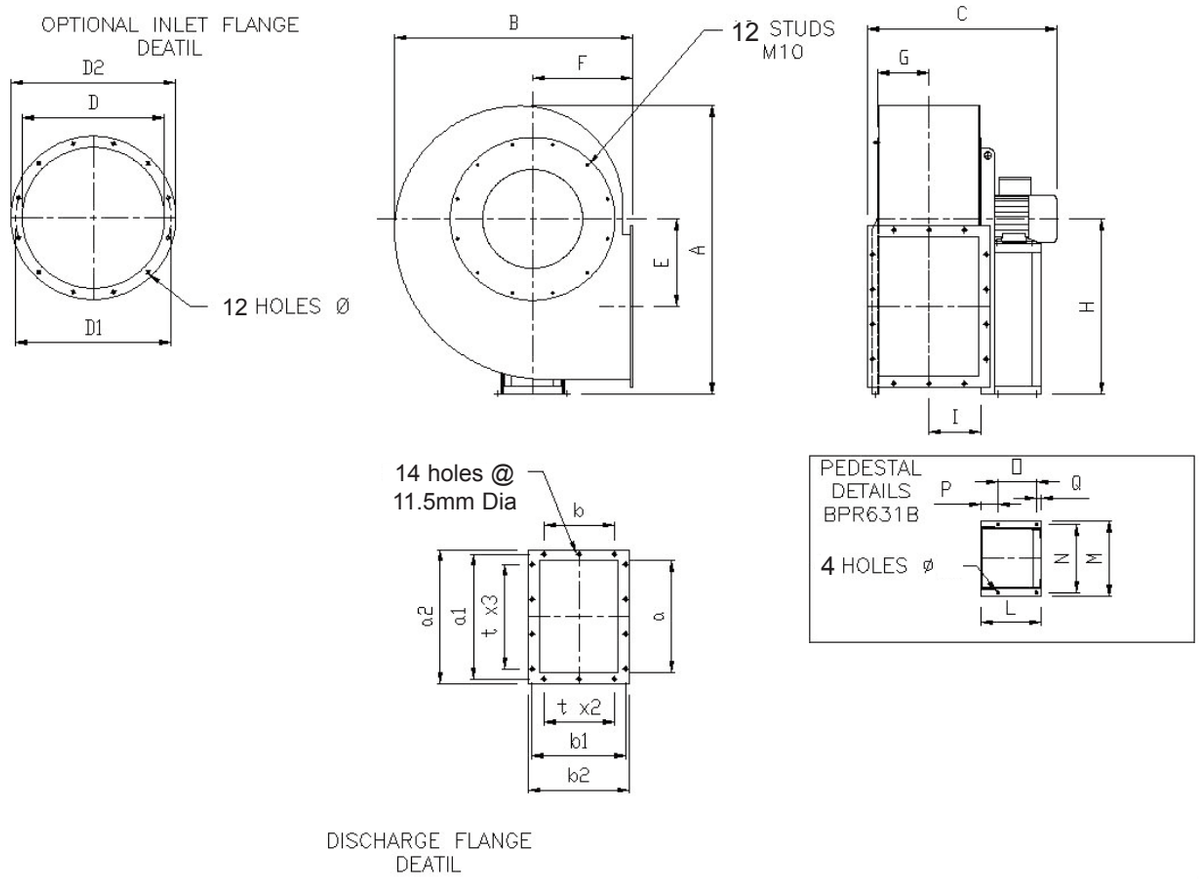

Viewed from motor side
Table of discharge angles (* Options may incur additional cost)

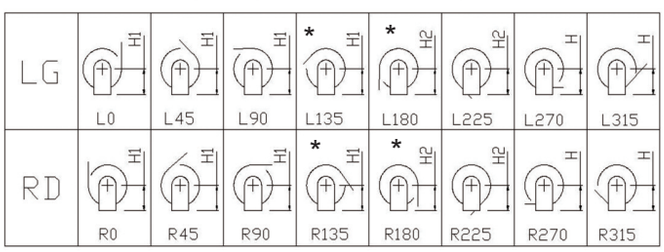

BPR Range painted RAL6011 Green as standard. [Other colours available upon request.]

All BPR Fans are revolvable.

* If AV mountings are required, a front pedestal/foot is necessary for support (details on request)

Table for blower dimensions:

Type		Fan										Base													Inlet Flange					Discharge Flange							Weight
Fan	Motor	A	B	C	E	F	G	H	H1	H2	I	L	M	N	N1	O	P	Q	R	S	T	U	V	Ø	D	D1	D2	N0	Ø	a	b	a1	b1	a2	b2	t	Kg
BPR 452/A	132 SB2	930	780	765	280	335	164	560	560	335	166	320	392	360	-	250	45	25	-	-	-	-	-	12	455	497	535	12	11,5	450	315	497	366	530	395	125	120
BPR 451/B	160 MR2			905								425	440	400		340	55	30						14													155
BPR 502/A	160 M2	1040	850	945	315	355	184	630	630	355	186	425	440	400	-	340	55	30	-	-	-	-	-	14	506	551	586	12	11,5	500	355	551	405	580	435	125	190
BPR 501/B	160 L2			945								425	440	400		340	55	30						14													205

Please note (1) - all drawings measurements are in millimeters (mm)
Please note (2) - above technical specifications are subject to change

AIR CONTROL INDUSTRIES LTD
Weycroft Avenue, Millwey Industrial Estate,
Axminster, Devon, EX13 5HU
t: +44(0)1297 529242 **f:** +44(0)1297 529241
e: sales@aircontrolindustries.com
w: www.aircontrolindustries.com

Ref: EV BPR 2014/V1